ZS-JPSC-25/40 High Voltage Reel

Rolling Technology Specifications:

1. Brand: ZISHU

2. Reel Model: ZS-JPSC-25/40 (Rubber Hose Inner Diameter: DN25, Rubber Hose Length: 40m, Rated Pressure: 4.0MPa)

3. Quantity of rubber hose: 1 piece;

4. Drive method: 24V DC electric/manual;

5. Additional Equipment: Equipped with flywheel damping and braking;

6. Entrance Position: Left side;

7. Inlet thread NPT 1.0" internal thread (flat face sealing);

8. Export thread: 1.0" BSP (flat seal), external thread;

9. Guidance device: three sides including the left, right, and lower sections;
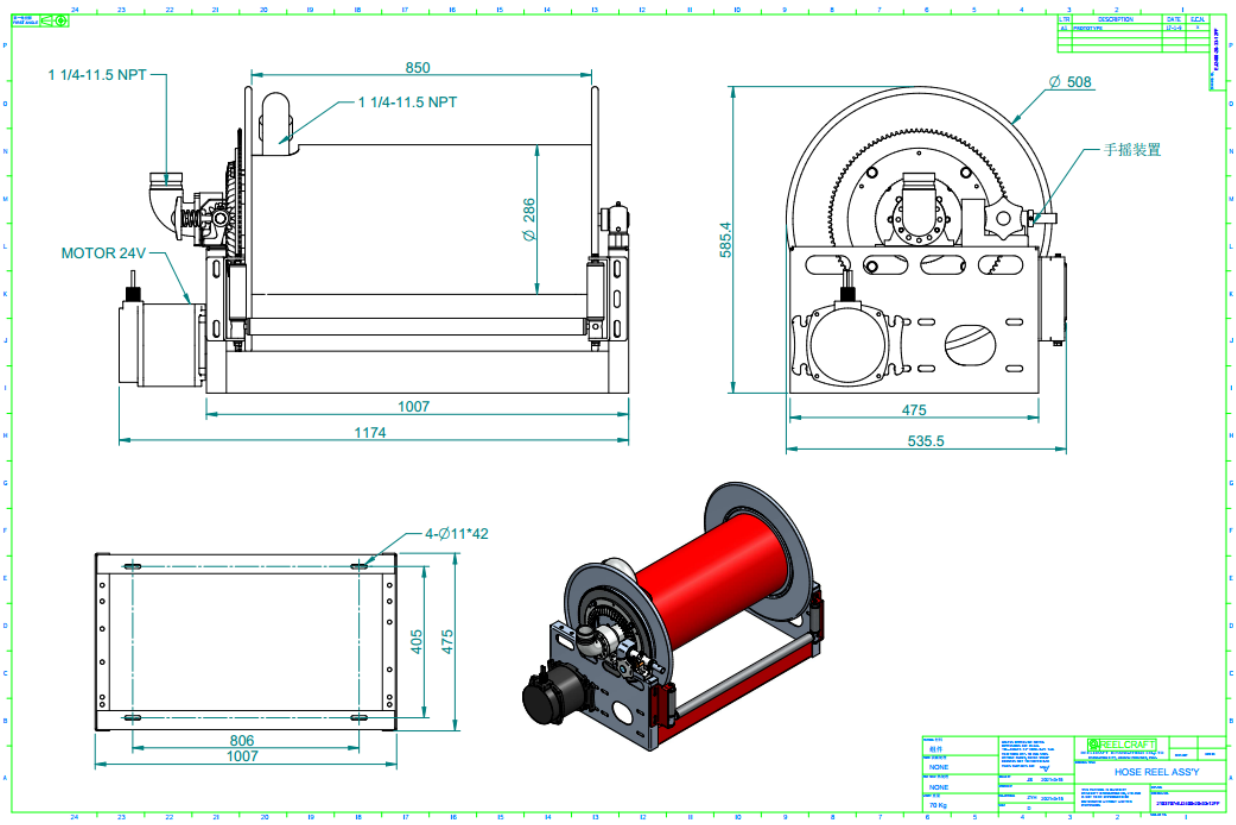
Dimensions: As per the confirmed drawing (interface specifications follow 1.) 0").